| REVISIONS | | | |
|---|---|---|---|
| REV | DESCRIPTION | DATE | APPROVED |
| B | ECN 10065: DIM [51.1] WAS 48.5, [13.0] WAS 10.5 | 08/28/2019 | TOZA |

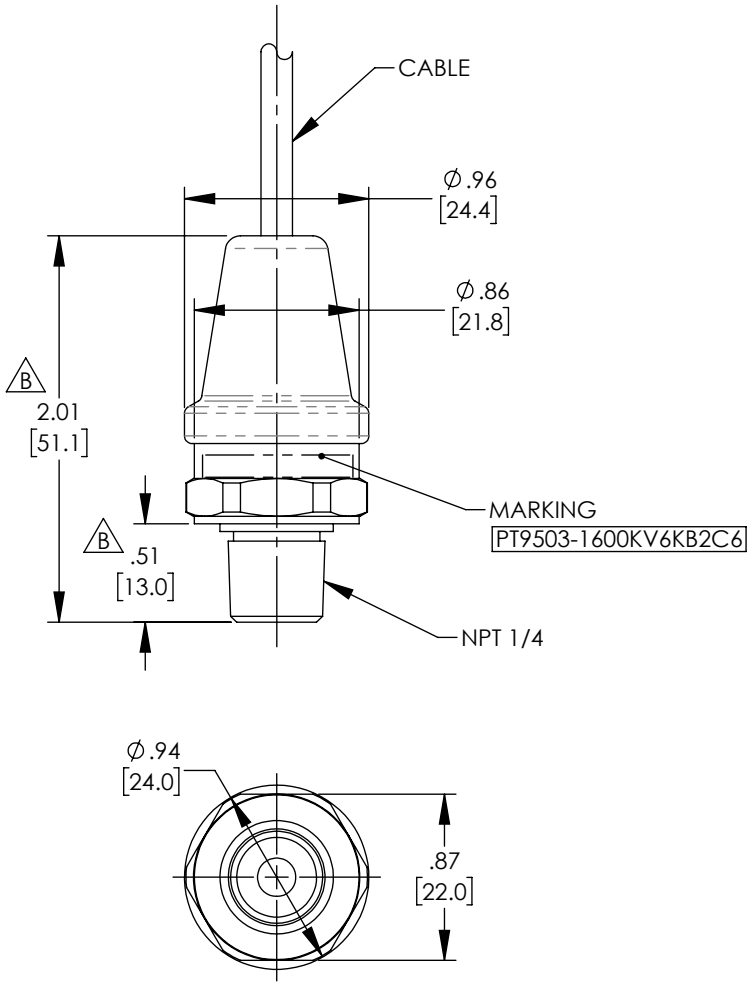


UNLESS OTHERWISE SPECIFIED
LEADING DIMENSIONS ARE INCHES
DIMENSIONS IN [ ] ARE MILLIMETERS

TOLERANCES:

| | |
|---|---|
| .X=± .2 [5.08] | FRACTIONS |
| .XX=± .01 [ .25 ] | ± 1/32 |
| .XXX=± .005 [ .13 ] | ANGLES ± 1° |

ALL DIMENSIONS SHOWN
ARE FOR REFERENCE ONLY.

THIRD-ANGLE PROJECTION


L-COM
an INFINITY brand
50 High Street, West Mill, 3rd Floor, Suite #30
North Andover, MA 01845 USA.
Phone: 1.800.341.5266 | 1.978.682.6936
Fax: 1.978.689.9484
www.L-com.com | e-mail: CustomerService@L-com.com



THE INFORMATION AND
DESIGN IN THIS DOCUMENT
IS THE PROPERTY OF
L-COM GLOBAL CONNECTIVITY.
ALL RIGHTS RESERVED.


SHEET 1 OF 1

SCALE N/A

| SIZE | CAGE | DRAWN BY | PART NUMBER | REV |
|---|---|---|---|---|
| A | 43321 | DZINN | PT9503-1600KV6KB2C6 | B |


THESE COMMODITIES, TECHNOLOGY OR SOFTWARE WERE EXPORTED FROM THE UNITED STATES IN ACCORDANCE WITH THE EXPORT ADMINISTRATION REGULATIONS. DIVERSION CONTRARY TO U.S. LAW PROHIBITED.


T-Rev.B